EUROCAVE

PROFESSIONAL

Railway Club Hotel. Melbourne-AUSTRALIA

THE EUROCAVE PROFESSIONAL COMMITMENT

EUROCAVE PROFESSIONAL IS THE BRAND DEDICATED TO THE PROFESSIONAL WORLD.
EUROCAVE, CREATOR OF WINE CABINETS AND CELLARS, OFFERS LONG TERM, PREMIUM SOLUTIONS FOR WINE PRESERVATION AND SERVICE THAT RESPECT THE WINE MAKER'S INTENTIONS AND ENABLE FAITHFUL COMMUNICATION OF THESE SAME INTENTIONS TO DEMANDING AND DISCERNING CONSUMERS.

In response to new concerns with regard to consumption, EuroCave Professional has an ongoing commitment to offering solutions that are perfectly suited to the hotel, restaurant, wine merchant and winemaker markets, as well as to their customers.
Each of the brand's products is the result of a confluence of pathways between recognised technical expertise and ergonomics which are specifically optimised for professionals. This is a tireless quest for perfection led by a passionate team who for many years have held the Origine France Garantie label, a marker of reliability and a commitment to durability. This is a story of men and women who, above all else, love their job: engineers, brand-dedicated salespeople, technicians, and others.
This is also a story of shared values. Beginning with the founders' story, the business' story has been built on the desire to create a specific product that respects and enhances wine. To help your wine-enthusiast customers to fully indulge in their passion and you, the professional, to conduct your business in complete serenity. Bring your wines up to ideal serving temperature, preserve your Grands Crus correctly or assist your wine by the glass service by preserving open bottles, these are the promises that our brand makes to you.

ORIGINE FRANCE® GARANTIE

BVCert. 6010761

Waterproef. Den Haag-NETHERLANDS

"300,000 customers worldwide, 30,000,000 stored bottles, the most exceptional protected wine brands favoured by many sommeliers in the most exquisite restaurants and hotels throughout the world. Wine cabinet inventor since 1976, the brand dedicated to wine professionals… EuroCave Professional."

MASTERING TIME

WINE IS A VALUED HERITAGE. EUROCAVE PROFESSIONAL HAS ALWAYS ADAPTED ITS WORK TECHNIQUES, TECHNOLOGICAL KNOW-HOW AND PRODUCT DESIGN TO YOUR BUSINESSES.

Wine culture starts with working the earth, the vines. Meticulous labour guided by the hands of those who cultivate grapes day after day, followed by the harvest, selection and ageing. Then it is time for our products to step in and protect the organoleptic quality of the wines.
The brand wants to be the unwavering link between the winemaker, sommelier, oenologist and taster. This is why the biggest sommeliers work alongside us to guide us in developing the most effective solutions. EuroCave Professional's historical partners share their knowledge and love of wine, which helps us continue to perfect our ageing, preservation and wine service products.

Partnered with sommeliers throughout the world, year after year EuroCave Professional reinforces its relationships with this wine-loving trade: Meilleurs Ouvriers de France, Union de la Sommellerie Française and others.

INTERNATIONAL ACCLAIM

Yashin Ocean House. London-UNITED KINGDOM

EUROCAVE PROFESSIONAL IS A TRUE SECURITY MEASURE FOR A BUSINESS THAT ACCENTUATES AND GUARANTEES THE BEST QUALITY FOR ITS WINES.
THE MOST EXCLUSIVE HOTELS AND RESTAURANTS USE OUR PRODUCTS.
THE BEST CHEFS AND SOMMELIERS TRUST THE BRAND...
THROUGHOUT THE WORLD, AND HAVE DONE SO FOR MORE THAN 40 YEARS.

Le Royal Hotel (Amman) • Restaurant De Kas (Amsterdam) • Rizzi (Baden-Baden) • Osteria Della Brughiera (Bergamo) • Hotel Adlon (Berlin) Le Quatrième Mur (Bordeaux) • Hôtel Five Seas (Cannes) • Armani Hotel - Burj Khalifa tower (Dubai) • Burj Al Arab Hotel - Jumeirah group (Dubai) InterContinental Hotel (Dublin) • Shelbourne Hotel Marriott (Dublin) • Les Bergues (Genève) • Olden Hotel (Gstaad) • Klaus K Hotel (Helsinki) Ritz-Carlton (Hong Kong) • Lotte Hotel (Jeju Island) • Mount Juliet (Kilkenny) • Skuaergaren Hotel (Langesund) • Dunraven Arms (Limerick) Four Seasons (Limassol) • Carlton Palace Hotel (Lisbon) • The Square Restaurant (London) • Hilton Hotel (London) • Grand Hotel (Lund) • Institut Paul Bocuse (Lyon) • Sofitel (Lyon) • Le Grand Casino La Mamounia (Marrakech) • Le Louis XV (Monaco) • Hotel Bayerischer Hof (Munich) • Castillo de Gorraiz (Navarra) • Marriot Associa Hotel (Nagoya) • Hôtel Palafitte (Neuchâtel) • Hôtel Negresco (Nice) • Bristol Hotel (Oslo) • Scandic Hotel (Oulu) La Reserva de Rotana Hotel (Majorca) • Holiday Inn Notre Dame de Paris (Paris) • Hôtel de Crillon (Paris) • Le Lido (Paris) • Le Ritz (Paris) Palais de l'Elysée (Paris) • Royal Monceau (Paris) • The Peninsula (Paris) • Shangri-La (Paris) • Galeries Lafayette Gourmet (Paris) • Plaza Athénée (Paris) Le Grand Restaurant Jean-François Piège (Paris) • Mandarin Oriental Paris (Paris) • Restaurants Bernard Loiseau (Paris, Dijon, Beaune) Ladurée (Paris) • Fauchon (Paris) • The Brando (Polynésie Française) • Restaurante Casa Velha (Quinta do Lago/Algarve) • Copacabana Palace (Rio de Janeiro) • Le Meridien (Rio de Janeiro) • Sofitel Rio (Rio de Janeiro) • Troisgros (Ouches) • Hotel Excelsior (Roma) • Restaurant Parkheuvel (Rotterdam) Maksoud Plaza (Sâo Paulo) • Hilton Hotel (Seoul) • Maia Luxury Resort (Seychelles) • Caves St-Emilion (St-Emilion) • La cave de Bacchus (St Martin) Restaurant Arnold's (Stockholm) • Sheraton Hotel (Tel Aviv) • The Norman hotel (Tel Aviv) • Groupe Georges Blanc (Vonnas) • Villa Park Wesola (Warsaw) • Yokohama Bay Sheraton Hotel & Towers (Yokohama) • Baur au Lac (Zurich) • Club Med 4 & 5 tridents villages (all around the world!)

WINE, EMULATOR IN TERMS OF SALES

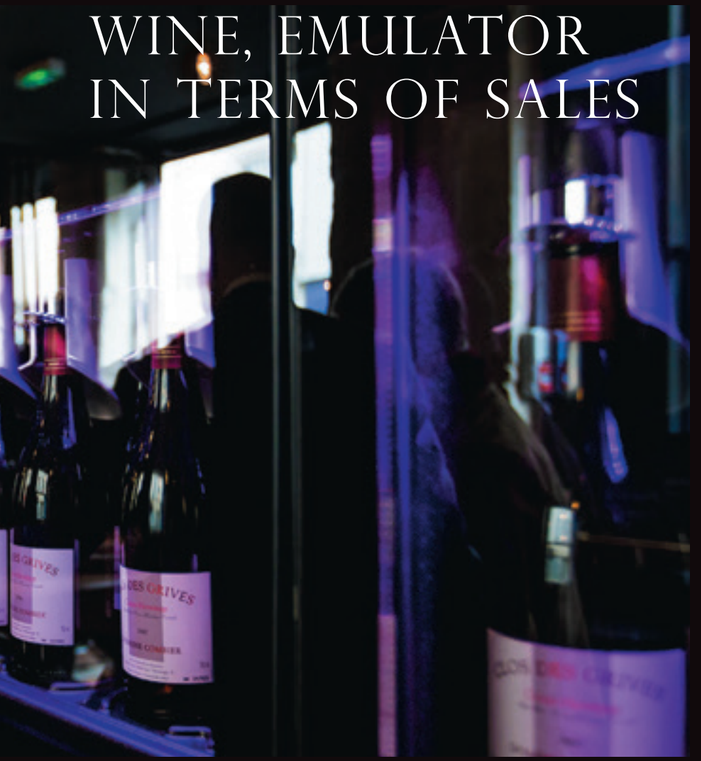

One of EuroCave Professional's fundamental areas of expertise is wine service. The brand is in line with an overall logic of wine sales through dedicated professional products that are vital for developing an effective wine strategy. EuroCave Professional solutions serve as essential links in the system and become real tools to increase your profitably and offer two-fold added value:

- the assurance of serving your wines under the best conditions: your bottles are completely accessible, stored at the right serving temperature.
- the credibility of your wine offer, both by the bottle or the glass. In using suitable, quality solutions, you show your client your dedication to wine while at the same time showcasing your selection. Therefore, wine sales become natural, based on a trusting relationship.

At the crux of a careful balance between a relevant wine selection, bottle display, suitable equipment and human know-how, EuroCave Professional is at your side to respond to new wine consumption trends.

OUR MOF SOMMELIER PARTNERS HAVE HELPED US DESIGN OUR PRODUCTS FOR EXACTING PROFESSIONAL NEEDS.

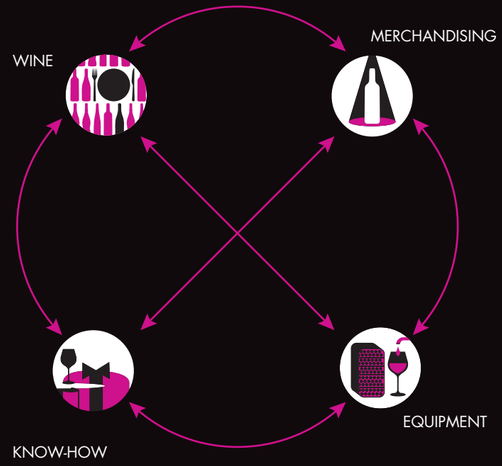

Following the example of renowned chefs who opened up their kitchens to cook in front of their clients, wine cabinets are now stylised and decorative objects that are made to be seen.
Today's wine cabinets are true showcases; they graciously prolong the months and years of hard work by the winemaker by accentuating and enhancing bottles over time.We wine professionals understand to what extent storage and service conditions are important. Our work loses its meaning and credibility without equipment that is technically and aesthetically perfect.

John Euvrard

Relationships with wine consumers have drastically changed over these last years. Now much better-informed and more exacting, they favour quality over quantity and are hungry for knowledge. (…) To enhance your wine by the glass offer, you have to embrace wine showcasing.You also have to carefully choose your glassware and select a storage solution for open bottles, which will be the best alternative to waste (…)

Fabrice Sommier

TWO WORLDS, TWO WINE EXPERIENCES...

WINE CABINETS | *Store, preserve, serve, display*

THE 3000 SERIES

The essentials at your fingertips

A reliable, functional and ergonomic range.

THE 5000 SERIES

The 100% built-in range

Four models each adapted to kitchen designer standards and placement constraints.

THE 6000 SERIES

Fully customisable wine cabinets

Multiple personalisation options for a wine cabinet to your liking, practically custom-made.

THE 9000 SERIES

Highlighting your most exceptional bottles

An exceptional range that showcases and enhances your wine offer.

WINE BY THE GLASS SERVICE | *Preserve, introduce, display, develop wine sales*

WINE BAR 2.0

Wine by the glass served at the table

2-bottle product for a friendly service at the table

WINE BAR 8.0

Wine by the glass served at the table

An 8-bottle version for a qualitative service at the table.

VIN AU VERRE 8.0

Wine by the glass dispenser

A solution to control the wine volume served.

NEEDS, SOLUTIONS.

"With our wine by the glass distributors, we respond to our customers' high expectations. In a bar or restaurant, with suggestions from a sommelier, the customer can now enjoy a grand cru or a quality local wine without having to purchase an entire bottle. For us, this is also about developing our sales, our inclusive offer was already rich and up-market (wine by the glass is included at the bar and at the restaurant), we had to offer an additional range for a supplement that was up-market, attractive and easy for our customers to access. However, with this new equipment and implementation of our sommelier station, we quickly saw a sales increase of 24%! "

OFFER BIG NAMES BY THE GLASS.

Good practices at Club Med:

Use of EuroCave Professional solutions to promote higher quality wines that are not included in "All Inclusive" offers. Wine displays or wine by the glass solutions are tools for showcasing these bottles. Wine lovers will be charmed when savouring higher quality wines, which will result in an almost instant increase in resort drink sales. A fast return on investment and an offer that responds to a demanding clientèle that appreciates sophisticated products.

DEVELOP A NEW DINING CONCEPT

Good practices at Galeries Lafayette Gourmet:

Use of several Wine Bar 8.0s to create a new "fooding" concept. The biggest gourmet grocery store in Paris has installed six Wine Bar 8.0s in its corners (fish point, steak house, cheese, butcher, Italian deli and Greek deli) in order to enhance dish and wine pairings. Each corner has been arranged with comfortable furniture in a trendy ambiance. Products are fresh and cooked right in front of the customers. This gives the opportunity, for example, to savour a piece of beef, freshly cut by the butcher, and a glass of wine that is perfectly paired with the dish.

Lafayette Gourmet. Paris-FRANCE

"The set-menu with a fresh product and glass of paired wine is ideal for our lunchtime clientèle. In general, we target office workers working in the neighbourhood who want to eat a quick and healthy meal!"

NEEDS, SOLUTIONS.

The Peninsula. Paris-FRANCE

COMBINE 1-TEMPERATURE CABINETS AND USE THEM AS SERVICE CABINETS

Good practices at Péninsula Paris: Place several wine cabinets side by side in the different restaurants and offices. Each cabinet is set at a different temperature. Therefore, the whole list is stocked at the perfect serving temperature, even incredible sakes served in the traditional Cantonese restaurant!

"I spread out my white wines, champagnes and red wines in several mono-temperature cabinets for both of the hotel's restaurants. Everything is labelled and perfectly organised. Sommeliers find the right bottle at first glance. They save time, but what's more, the wine is at the perfect serving temperature right away, which is very much appreciated by our clientèle of exacting amateurs."
Xavier THUIZAT, Head Sommelier

ENHANCE A BOTTLE DISPLAY IN THE WINE AISLE.

Good practices at Leclerc in Bourgoin-Jallieu: Combine several ShowCave wine displays and replicate the wine shelf effect in the wine aisle. Inside, grand crus, vintage champagnes and many prestigious labels. A merchandising strategy that can't be mistaken: this wine display elicits the interest of wine-loving customers. In speaking with certain customers, the department manager noticed that ShowCaves displayed in this way enhanced credibility in the wine aisle. In cleverly rearranging the aisle, he even saw a noticeable increase in average shopping basket sales. He put €30/40 value bottles next to the ShowCave displays. This is certainly a high price, but it seems very accessible compared to Grands Crus and prestigious wines on display just a few centimetres away!

Leclerc. Bourgoin Jallieu-FRANCE

"Customers feel like they have a quality selection of wines like at their local wine merchant's."

CHOOSING A WINE CABINET THAT FITS YOUR NEEDS

L'Auberge des Cimes. Saint-Bonnet-Le-Froid-FRANCE

CABINET FUNCTIONALITY

1-temperature

1 cabinet, 2 functions depending on your needs and the way you set the temperature: store your wines in ideal ageing conditions.
Or
Store a family of wines at the right serving temperature (white wines or red wines)
#maturing
#service

2-temperature

2 independent temperature areas to store your wines, whites and reds, at serving temperature
#service

Multi-temperature

What is it? A graduation of temperatures from top to bottom. All of your wines are at the right serving temperature in a single cabinet.
#service

CAPACITY

Small model

From 38 to 74 bottles

Large model

From 150 to 182 bottles

Can be adjusted based on your storage needs or to respond to your space constraints.

DOOR FINISHINGS

Glass

Full glass
(no frame)

Solid

To suit your décor.

INTERIOR ARRANGEMENT

Sliding shelf

Presentation shelf

Serving shelf

Storage shelf

Adapts your equipment to your business.

Learn about the detailed characteristics of the wine cabinets on page 52.

WINE CABINETS

S T O R E
P R E S E R V E
S E R V I C E
D I S P L A Y

WINE CABINETS

- **EuroCave know-how**
- **Modular equipment**
- **A distinct “professional” identity**

33 Cité. Lyon-FRANCE

3000 SERIES

THE ESSENTIALS AT YOUR FINGERTIPS

The 3000 Series offers two cabinet models with a maximum capacity of 230 bottles of your choice, depending on the selected usage: preservation or storage at serving temperature. Functional and aesthetic, the 3000 Series was designed to respond to professionals’ basic needs thanks to modular equipment, precise temperature control and a tinted glass door that showcases your finest bottles.

1 SIZE

Large model
Up to 189 bottles

2 FUNCTIONALITIES

1 temperature

1 temperature

1 DOOR

Black frame glass door

CHOICE OF SHELVES

Sliding

Mixed

3181S
Black frame glass door
Premium Pack
13 sliding beech shelves
Up to 189 bottles

3181V
Black frame glass door
Mixed Pack
5 beech shelves
Up to 230 bottles

Find characteristics for all products in this range in the **“Technical Data”** section at the end of this catalogue.

- Range can be built in
- Adapted ergonomics
- A distinct “professional” identity

Institut Paul Bocuse. Lyon-FRANCE

5000 SERIES

THE 100% BUILT-IN RANGE

The 5000 Series offers four wine cabinet models ranging from 38 to 118 bottles, each designed specifically according to kitchen designer standards. Adjustable and modular, cabinets in this series offer upgradeable equipment depending on different professional storage needs. The stainless steel plate at the bottom of the door withstands intensive use when opening and closing the cabinet. Built-in under a work surface or in a restaurant dining room, the 5000 Series combines a distinct professional identity with increased practicality.

2 SIZES

Small model
Up to 38 bottles

Large model
Up to 118 bottles

2 DOORS

Black frame glass door

Full glass pane

2 FUNCTIONALITIES

1 temperature

Multi- temperatures

CHOICE OF SHELVES

Sliding

Diplay

Storage

5059S
Full glass door
Premium Pack
4 sliding beech shelves
Up to 38 bottles
Can be built-in

5259V
Black frame glass door
Premium Pack
14 sliding shelves
Up to 118 bottles
Can be built-in

Find characteristics for all products in this range in the **“Technical Data”** section at the end of this catalogue.

- Low energy consumption
- Design
- Customisable and modular equipment

Christian Têtedoie. Lyon-FRANCE

6000 SERIES

FULLY CUSTOMISABLE WINE CABINETS

The 6000 Series is our latest generation in wine cabinets. It combines cutting-edge technology, clever design and respect for the environment.

It responds to all of your professional needs whether for preservation or service.

1 temperature: adjustable from 5 to 20°C, it can be dedicated to preserving your bottles or setting the serving temperature for a certain type of wine.

2 temperatures: 2 distinct temperature areas to efficiently store all of your wines at serving temperature (5 to 11°C for the cooling area and 15 to 20° for the holding temperature area).

Multi-temperature: 10°C temperature graduation (adjustable between 5 and 22°C) to ensure the perfect serving temperature for all of your wines, no matter their region, colour, or other criteria.

By combining several wine cabinets, you can precisely manage the serving temperature for your full wine list. Placed side by side, your cabinets will also show off your wines. Discover our options for doors, lighting and shelving to stylise your cabinets!

Christian Têtedoie. Lyon-FRANCE

DESIGN, PERFORMANCE, CUSTOMISATION

Your cabinet is fully customisable to facilitate storage or access to your bottles, or even optimise bottle display.

2 SIZES

Small model
Up to 74 bottles

Large model
Up to 182 bottles

3 FUNCTIONALITIES

1 temperature

2 temperatures

Multi-temperature

3 DOORS

Solid

Black frame glass door

Full glass pane

CHOICE OF SHELVES

Sliding

Diplay

Storage

Serving

ARE YOU LOOKING FOR MORE DESIGN, TECHNOLOGY AND SERVICE?

Choose from among the **PLUS** options

Full lighting with strip of lighting
(except 2T°)

PLUS shelves Glossy Black front or Light Oak

5-Year Warranty

6074V
Solid door
Premium Plus Pack
5 glossy black sliding shelves
Up to 74 bottles

6170D
Full glass door
Presentation Pack
2 presentation kits and 6 beech sliding shelves
Up to 150 bottles

Find characteristics for all products in this range in the **"Technical Data"** section at the end of this catalogue.

- High-impact bottle display
- Shallow depth
- Modular storage

Sexy Fish. London-UNITED KINGDOM

9000 SERIES

PUT THE SPOTLIGHT ON YOUR FINEST BOTTLES

Through a combination of noble materials and careful craftsmanship, ShowCave renews the wine cabinet approach: innovative and thoroughly modern, it creates the perfect combination of cutting-edge technology and daring design. LEDs placed along the walls diffuse soft amber light that will showcase and enhance your bottles.
The “Main du Sommelier”, EuroCave patented bottle holder, accommodates all bottle types and makes switching from storage to presentation easy.
More than a simple wine cabinet solution, ShowCave lends character to your interior, whether it is classic or contemporary. With the multiple assembly combinations, let your imagination run wild to design a true decorative element while creating a personalised and unique ambiance.

With its shallow depth and ability to be built in, ShowCave is designed to find its niche in every environment. It will perfectly enhance and showcase your best vintages.

Cave de Max. Cap d'Ail-FRANCE

Royal Monceau. Paris-FRANCE

2 SIZES

1 door
Up to 90 bottles

2 doors
Up to 180 bottles

1 FUNCTIONALITY

1 temperature

FINISHINGS

Full glass door

Lateral walls in tempered glass, mirrored backing
LED lighting from top to bottom

SHELVES

Stainless steel rods with modular "Main du Sommelier" bottle supports

9090V
Up to 90 bottles
Can be built-in

9180V
Up to 180 bottles
Can be built-in

Find characteristics for all products in this range in the **"Technical Data"** section at the end of this catalogue.

WINE BY THE GLASS SERVICE

PRESERVE

INTRODUCE

DISPLAY

DEVELOP YOUR WINE SALES

WINE BY THE GLASS SERVICE

WINE BAR

FOR WINE BY THE GLASS SERVED AT THE TABLE

Wine Bar exists in 2 sizes: 2 or 8 open bottles.
Wine Bar 2.0 and 8.0 have two independently adjustable temperature areas for optimum serving temperature for both whites and reds. Open bottles are protected from oxidation for up to 10 days.
The glass doors and lighting nuances offer a modern display to enhance the finest wine labels in a reception room.
Bottle handling is very simple and quick, leading to excellent ease of use: intuitive ergonomics, no maintenance, no consumables.

The Wine Bar range is the only solution that enhances the wine service by the glass and by the bottle. It favours table service for the customer, giving the opportunity for a special exchange. Wine Bar will improve the quality of your service while maintaining the timeless gestures of the biggest sommeliers.

- **Serving temperature & preservation of open bottles**
- **High-impact bottle display**
- **No consumables**

Royal Monceau. Paris-FRANCE

Le Selsius. Lyon-FRANCE

WINE BAR 2.0

3 CONFIGURATIONS

1 white / 1 red

or **2 whites**

or **2 reds**

4 FUNCTIONALITIES

Set to serving temperature 8 and/or 16°C

Preservation of opened bottles Up to 10 days with the vacuum system

Sommelier gesture Exclusive patented vacuum system

High-impact display/ dramatisation of the wines

LIGHT

A choice of 50 shades

HIGHLIGHT: INTUITIVENESS

Fast and easy bottle handling

No consumables (no nitrogen or argon)

No maintenance

A MODULAR PRODUCT

Make it evolve as your business grows

Wine Bar 2.0

Find characteristics for all products in this range in the **"Technical Data"** section at the end of this catalogue.

Pierre Sang On Gambey. Paris-FRANCE

WINE BAR 8.0

3 CONFIGURATIONS

4 whites/4 reds

or 8 whites

or 8 reds

8 open bottles + 6 in store, at the right serving temperature

4 FUNCTIONALITIES

Set to serving temperature 6 to 18°C

Preservation of opened bottles Up to 10 days with the vacuum system

Sommelier gesture Exclusive patented vacuum system

High-impact display/ dramatisation of the wines

LIGHT

A choice of 50 shades

HIGHLIGHT: INTUITIVENESS

Fast and easy bottle handling

No consumables (no nitrogen or argon)

A SHARED EXPERIENCE

- **Wine Bar enhances the wine service ritual** directly at the customer's table. It allows for close and qualitative service while maintaining the timeless gestures of the biggest sommeliers.
- **It preserves and makes each of your bottles profitable.** You can more easily increase your wine by the glass selection and thereby increase your margin by avoiding waste using the vacuum system.
- **It shows off your bottles.** Wine Bar draws in your customer's attention thanks to the design and light display and lets you naturally develop wine by the glass sales.

Wine is an experience to be shared. Wine Bar is part of this experience.

Wine Bar 8.0

Find characteristics for all products in this range in the **"Technical Data"** section at the end of this catalogue.

- **Control over served wine volume**
- **Serving temperature and preservation of open bottles**
- **Simplicity and user-friendliness**

Restaurant Le Golf. La Tour de Salvany-FRANCE

VIN AU VERRE 8.0

WINE DISPENSER FOR AN EFFICIENT AND WELL MANAGED WINE BY THE GLASS SERVICE

With two distinct and independently adjustable temperature compartments, the Vin au Verre 8.0 keeps wines at the right serving temperature, ready to be served by the glass at any time!

It holds 8 service bottles (4 whites/4 reds or 8 reds or 8 whites), as well as an 8-bottle reserve kept at the right temperature and stored within easy reach to save time each time a bottle is changed.

In order to offer a wide selection of wines by the glass, each bottle placed in the Vin au Verre 8.0 can be served with 3 different, configurable volumes thereby avoiding any waste, and lets you precisely control your flow.

Thanks to the nitrogen preservation system, your wine is protected from all oxidation risks for up to 3 weeks after opening.

The modern design will enhance your bottles while perfectly integrating into every environment.

Restaurant Le Golf. La Tour de Salvagny - FRANCE

3 CONFIGURATIONS

4 whites/4 reds — or **8 whites** — or **8 reds**

+ 6 to 8 bottles in store, at the right serving temperature

5 FUNCTIONALITIES

- **Set to serving temperature 6 to 18 °C**
- **Served volume control - 3 configurable volumes per bottle**
- **Open bottle preservation with nitrogen for up to 3 weeks**
- **High-impact display/ dramatisation of the wines**
- **Monitoring wine turnover**

FOR MORE PRODUCTIVITY AND SIMPLICITY

- **A unique touchscreen**
- **An automatic cleaning system**

FAST RETURN ON INVESTMENT EXAMPLE:

Example:

You throw away the equivalent of 8 glasses per day.

At €7.50 per glass, that's €18,000 lost per year.

Enhance your offer, boost suggestions and advice and watch your sales increase from 20 to 60%.

Request a simulation from your EuroCave Professional distributor.

AN EFFICIENT AND WELL MANAGED WINE BY THE GLASS SERVICE

The EuroCave Professional wine by the glass dispenser is a true command tool for your wine by the glass offer with its served volume control functionalities, serving temperature and open bottle preservation features.

By limiting waste and upgrading your product range, you will easily develop your wine sales.

On the Vin au Verre 8.0, you will be able to follow the turnover achieved on wine by the glass to improve your offer continuously!

Vin au Verre 8.0
3 programmable measurements per bottle
Visual warnings and tutorials included on the screen

Find characteristics for all products in this range in the **"Technical Data"** section at the end of this catalogue.

CELLAR LAYOUTS

ARRANGE
ASSEMBLE
MODULATE STORAGE
AD INFINITUM

CELLAR LAYOUTS

MODULORACK

PRODUCT ADVANTAGES

- **A solution for storing wine cases**
- **An exclusive sliding shelf system**
- **Easy access to bottles**

MODULOSTEEL

PRODUCT ADVANTAGES

- **Storage with clean, modern lines**
- **A strong and stable steel structure**
- **Bottles in “storage”, “presentation” mode or in their original cases**

MODULOTHÈQUE

PRODUCT ADVANTAGES

- **Storage modules in solid oak, a noble, resistant wood**
- **Modular units beautifully crafted with a variety of functions.**
- **Can adapt to the requirements of the room** *(loft, corner of room, vaulted walls)*

INOA CELLAR CONDITIONER

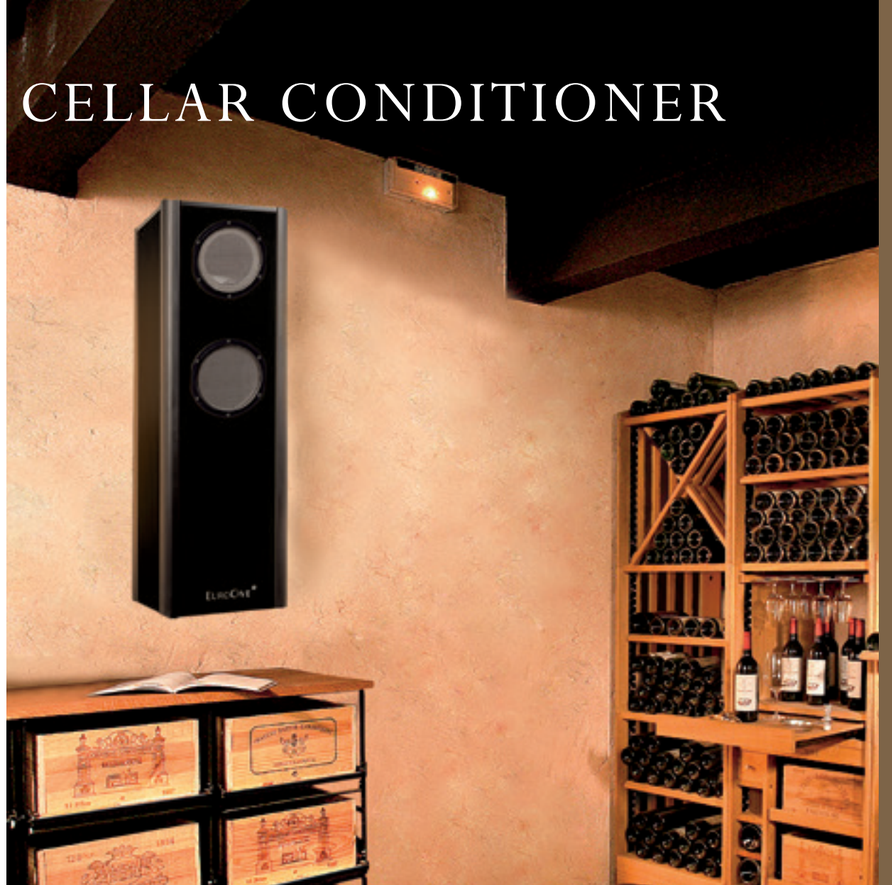

PRODUCT ADVANTAGES

- **A silent wine cellar conditioner**
- **Aesthetic and easy to maintain**
- **To control the temperature and humidity of your wine cellar**

TECHNICAL SPECIFICATIONS

Model	Dimensions* H x W x D (mm)	Weight empty (kg)			Ambient use temperature T° min - T° max (°C)			Shelving type of equipment	Lighting
		Full glass door	Glass door	Solid door	Full glass door	Glass door	Solid door		
3000 SERIES									
1-temperature (Ageing OR Service)									
3181V	1810 x 680 x 680	-	70	-	-	0-30	-	Premium Pack/13 shelves (189 bottles) Mixed Pack/5 shelves (up to 230 bottles)	No
Multi-temperature (Service)									
3181S	1810 x 680 x 680	-	70	-	-	12-30	-	Premium Pack/13 shelves (189 bottles) Mixed Pack/5 shelves (up to 230 bottles)	No
5000 SERIES									
1-temperature (Ageing OR Service)									
5059V	830 x 595 x 550	47	46	-	0-30	0-30	-	Premium Pack/4 sliding shelves (38 bottles) Or "à la carte"	YES - 2 LEDs
5259V	1790 x 595 x 565	78	76	-	0-30	0-30	-	Premium Pack/14 sliding shelves (118 bottles) Or "à la carte"	YES - 2 LEDs
Multi-temperature (Service)									
5059S	830 x 595 x 550	45	44	-	12-30	12-30	-	Premium Pack/4 sliding shelves (38 bottles) Or "à la carte"	YES - 2 LEDs
5259S	1790 x 595 x 565	76	74	-	12-30	12-30	-	Premium Pack/14 sliding shelves (118 bottles) Or "à la carte"	YES - 2 LEDs

***The dimensions shown do not include the handle.**

Model	Dimensions H x W x D (mm)	Weight empty (kg)			Ambient use temperature T° min - T° max (°C)			Shelving type of equipment	Lighting
		Full glass door	Glass door	Solid door	Full glass door	Glass door	Solid door		
6000 SERIES									
1-temperature									
6074V	960 x 680 x 715	60	58	52	0-30	0-30	0-35	Premium Pack/5 sliding shelves (74 bottles) Presentation Pack/1 Presentation shelf + 2 sliding shelves (70 bottles) OR "à la carte" - optional PLUS shelves	YES - 2 LEDs Optional light strip
6182V	1825 x 680 x 715	96	94	81	0-30	0-30	0-35	Premium Pack/14 sliding shelves (182 bottles) Presentation Pack/2 Presentation shelves + 7 sliding shelves (162 bottles) OR "à la carte" - optional PLUS shelves	YES - 2 LEDs Optional light strip
2-temperatures									
6170D	1825 x 680 x 715	100	98	85	10-30	10-30	10-35	Premium Pack/13 sliding shelves (170 bottles) Presentation Pack/2 Presentation shelves + 6 sliding shelves (150 bottles) OR "à la carte" - optional PLUS shelves	YES - 4 LEDs
Multi-temperature									
6074S	960 x 680 x 715	58	56	50	12-30	12-30	12-30	Premium Pack/5 sliding shelves (74 bottles) Presentation Pack/1 Presentation shelf + 2 sliding shelves (70 bottles) OR "à la carte" - optional PLUS shelves	YES - 2 LEDs Optional light strip
6182S	1825 x 680 x 715	94	92	79	12-30	12-30	12-30	Premium Pack/14 sliding shelves (182 bottles) Presentation Pack/2 Presentation shelves + 7 sliding shelves (162 bottles) OR "à la carte" - optional PLUS shelves	YES - 2 LEDs Optional light strip
9000 SERIES | SHOWCAVE									
1-temperature (Ageing OR Service)									
9090V	2190 x 692 x 499	172	-	-	15-25	-	-	30 stainless steel rods with Main du Sommelier supports, can be configured in "flat" or "presentation" version Up to 90 bottles	YES - 6 LEDs
9180V	2190 x 1284 x 499	270	-	-	15-25	-	-	60 stainless steel rods with Main du Sommelier supports, can be configured in "flat" or "presentation" version Up to 180 bottles	YES - 6 LEDs

***The dimensions shown do not include the handle.**

BUILT-IN DATA

FOR THE 5000 AND 6000 SERIES

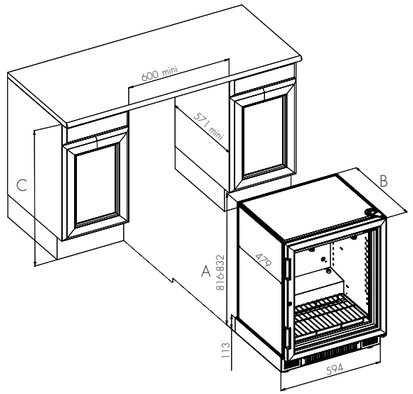

5000 SERIES

Dimensions that must be complied with

	A max.	A min.	A max.	A min.	B	C min.
			with riser*	with riser*		
5059	832	816	875	859	549	821

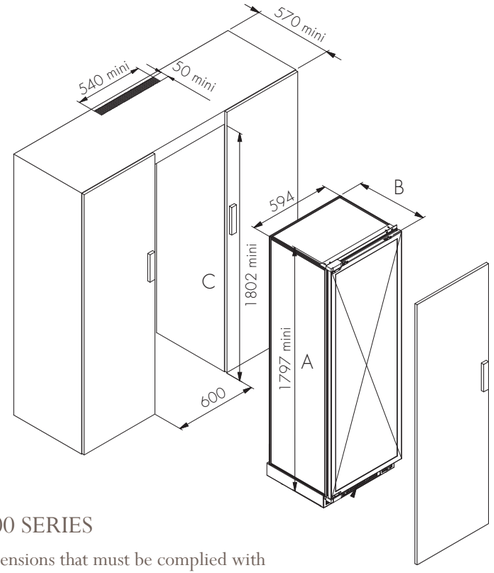

5000 SERIES

Dimensions that must be complied with

	A max.	A min.	A max.	A min.	B	C min.
			with riser*	with riser*		
5259	1792	1776	1835	1819	566	1781

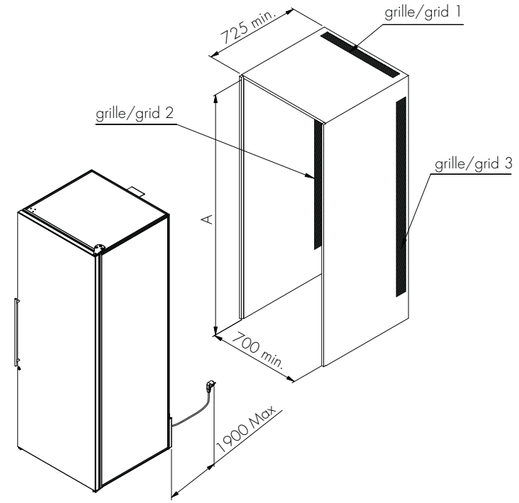

6000 SERIES

Dimensions that must be complied with

	A min (mm)	Grid 1 (cm^2)	Grid 2 (cm^2)	Grid 3 (cm^2)
6074V, 6074S	960	350	350	350
6182V, 6182S, 6170D	1825	350	750	750

Hotel Shangri-La. London-UNITED KINGDOM

L'Auberge des Cimes. Saint-Bonnet-Le-Froid-FRANCE

Cabotte. London-UNITED KINGDOM

9000 SERIES

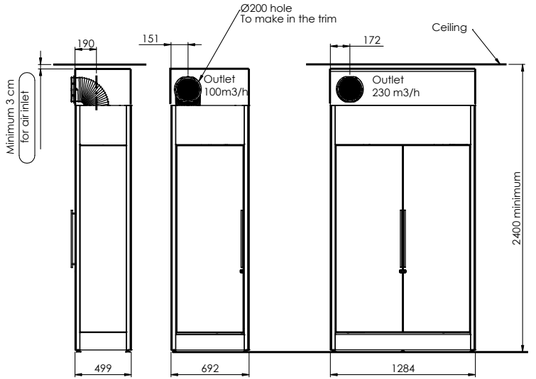

ShowCave built-in

Your ShowCave displays can be fully built-in for a better aesthetic rendering.
However, it is recommended to follow our instructions in terms of calorie extraction so as not to alter the performance of your cabinets.

Warning, this type of installation requires:

- Minimum ceiling height of 2400 mm
- The air inlet must be a minimum of 3 cm over the entire length
- For aesthetic purposes, the air outlet can also be positioned on the left side.

You can assemble several ShowCave cabinets and create a true wine wall with different temperature compartments.

For a quality aesthetic finishing, we offer filler systems to join your ShowCaves together (straight or angled fillers)
When you combine 2 ShowCaves, it is possible to connect their air outlets. Ask for the technical guide from your EuroCave Professional distributor.

Leclerc. Bourgoin Jallieu-FRANCE

2-Door ShowCave (9180V) assembled with a 1-door model (9090V) with a straight filler.

ShowCave volume assembled with filler	Length (mm)
2 doors + 1 door	1992
2 doors + 2 doors	2584
1 door + 1 door	1400
1 door + 2 doors + 1 door	2700

OUR SHELVES

THREE USAGES, DIFFERENT OPTIONS, TO ADAPT TO YOUR BUSINESS.

- **Three types of shelves for three types of usage**
- **Shelf personalisation options depending on the range**
- **Cabinet arrangement is practically "custom-made"**

SHELF SUMMARY TABLE

	Classic			PLUS	Compact
Organise	MDS Universal Shelf Up to 12 bottles	MDS Magnum Shelf Up to 7 bottles	Champagne Shelf Up to 10 bottles	MDS2 Universal Shelf Up to 12 bottles	MDS Universal Shelf Up to 8 bottles
Store	Universal Shelf Up to 77 bottles	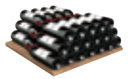 Bordeaux Bottle Shelf Up to 78 bottles		Universal Shelf Up to 77 bottles	Universal Shelf Up to 50 bottles
Present	MDS Presentation Shelf Up to 6 inclined bottles, Up to 26 flat bottles	Presentation shelf Up to 22 bottles	Serving shelf Up to 20 bottles	MDS2 Presentation Shelf Up to 6 inclined bottles, Up to 26 flat bottles	MDS Presentation Shelf Up to 5 inclined bottles, Up to 4 flat bottles
	6000 Series			Optional 6000 Series	5000 Series

Shelf capacities are calculated with traditional Bordeaux bottles (except for the Champagne and Magnum shelves) - MDS: Main du Sommelier

6000 SERIES ONLY

THE MAIN DU SOMMELIER

patented **design**

This dual-material shell combines a rigid structure for supporting the bottle and a more flexible elastomer edging that hugs the forms and protects against vibrations.
These two models are detachable to adapt bottle storage on the shelf depending on their shape and number.

The Plus® model offers a reworked aesthetic and a more intuitive use in terms of bottle placement.

LUXURY DETAILS

Our PLUS shelves offer you the advantages of next generation interior organisation for better ergonomics and ease of use.

You are free to select the façade embellishment: glossy black or light oak.

Name plates in steel epoxy can be adjusted on the shelf where you can easily write the wine names. A white erasable marker is provided.

A reducer mounted to each sliding shelf allows for silent use and eases its entry into the cabinet.

TECHNICAL SPECIFICATIONS

Model	Dimensions H x W x D (mm)	Weight empty (kg)	Ambient use temperature T° min – T° max (°C)	Capacity	Open bottle preservation technology	Preservation duration after opening	Lighting	Accessories/ Options
Wine by the glass dispenser (3 adjustable serving measures)								
Vin au Verre 8.0	735 x 1035 x 585	85	10-35	8 in service +6-8 reserved bottles	Nitrogen	Up to 3 weeks	YES Multicolour LED (200 colours)	Self-Service Connection to a cash-register 5 colours for cabinet body
Wine Bar - Wine by the glass served at the table								
Wine Bar 8.0	602 x 1076 x 460	85	10-35	8 in service +6-8 reserved bottles	Vacuum system	Up to 10 days	YES Multicolour LED	Remote-controlled lighting
Wine Bar 2.0	491 x 315 x 268	13,8	18-30	2 in service	Vacuum system	Up to 10 days	YES Multicolour LED	Remote-controlled lighting

Our solutions for the wine by the glass service can be easily built-in.

However, to guarantee correct operating conditions, please comply with the built-in instructions: leave a minimum of 50 mm around the device so as to allow for natural air flow.

BUILT-IN DATA

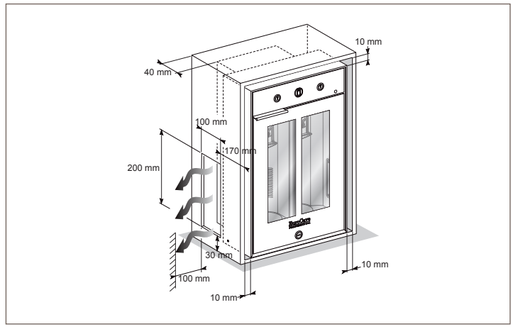

Flush-fitting one single Wine Bar 2.0

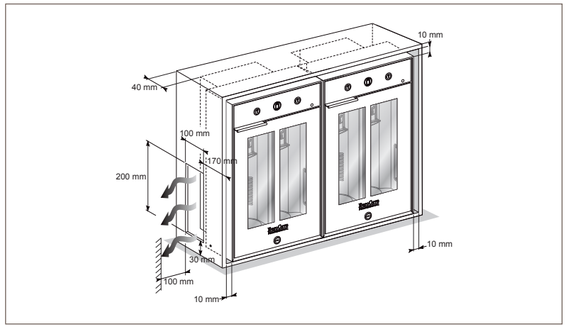

2 Wine Bar 2.0 side by side

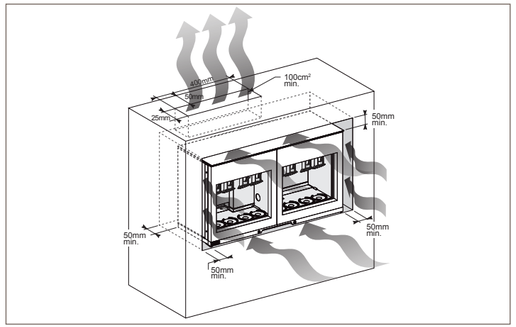

Wine Bar 8.0

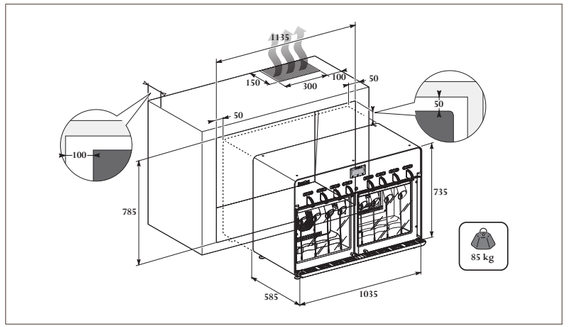

Vin au Verre 8.0

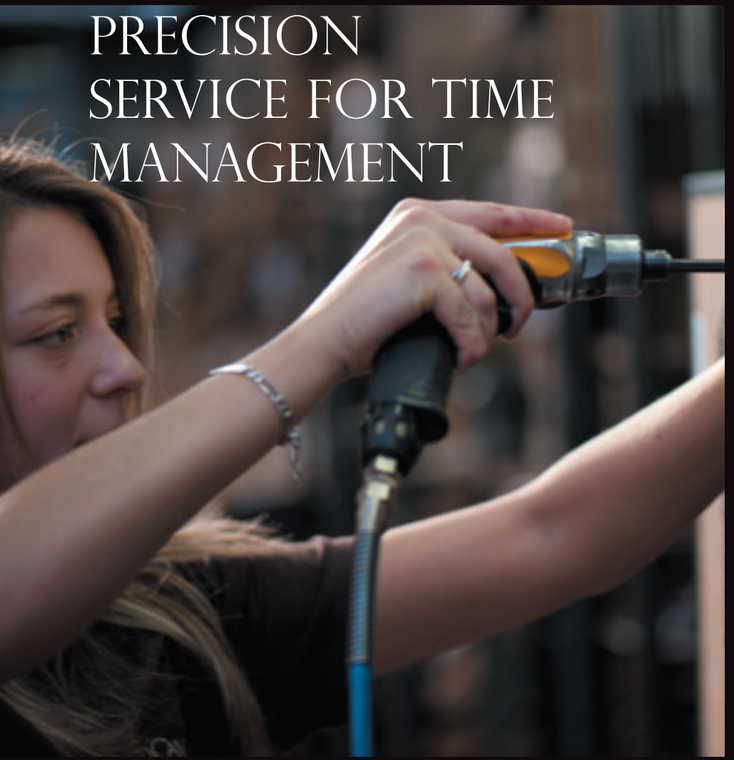

PRECISION SERVICE FOR TIME MANAGEMENT

SINCE 1976, THE EUROCAVE GROUP HAS BEEN DESIGNING AND MANUFACTURING ITS PRODUCTS IN FRANCE. A MARK OF RELIABILITY AND A STRONG COMMITMENT TO QUALITY.

A passionate team

EuroCave Professional promises precision technology based on five main principles that characterise correct wine preservation. Each EuroCave product benefits from know-how and oenological knowledge from experts involved in their design and manufacture.

EuroCave Professional is:

- **An integrated research department** that dreams up and creates cutting-edge technology and designer products.
- **Two production factories in the North of France and Isère that employ more than 100 people**: they have every production tool necessary to create our products, which makes it possible for the brand to ensure quality in compliance with the strictest international standards.
- **More than 13 registered patents** for both innovative technologies and product design ergonomics.

The Origine France Garantie label

Since 8 June 2012, the EuroCave Group is the only wine cabinet manufacturer to have obtained the **Origine France Garantie label**, which recognises the commitments undertaken by the brand for over 40 years. The aim of the Origine France Garantie label is to support French know-how in France and abroad. To this end, EuroCave satisfies every requirement and guarantee.

ORIGINE FRANCE® GARANTIE

BVCert. 6010761

A rigorous quality process

EuroCave quality controls **surpass EN 60335 standards requirements:**

- **Cold circuit sealing test** on 100% of our wine cabinets.
- **Electronic safety test** on 100% of our wine cabinets.
- A 40-point **final check** and functional test on 100% of our cabinets.

All of these checks help to scrupulously validate compliance of the delivered cabinet with regard to customer needs.

BEYOND PRODUCTS, EUROCAVE PROFESSIONAL SERVICES

BEYOND OUR CONSTANT COMMITMENT TO THE BRAND TO MANUFACTURE QUALITY PRODUCTS, EUROCAVE PROFESSIONAL IS ALSO A SET OF SERVICES INTENDED TO EASE DAY-TO-DAY OPERATIONS AND SUPPORT ITS CLIENTS IN ACHIEVING EXCELLENCE.

A web platform and dedicated customer service department

The EuroCave Professional website groups together all of the brand's products and accessories. This gives you fast access and an overall view of all the features offered by range or use. It also presents details for services, distributors, other customer creations, advice, etc., to offer you the most information possible and guide you in your research for products that will best suit your needs.

www.eurocavepro.com

An integrated after-sales service

To diagnose a problem or provide a solution, EuroCave has a hotline available in more than 70 countries for all EuroCave Professional certified distributors. This technical support is accessible during business hours and is staffed by professionals trained in EuroCave technical products.

When a breakdown is detected, EuroCave undertakes to send original spare parts under warranty to your distributor, within 48 hours.

This service ensures that, no matter which country your EuroCave Professional product is located in, you will have access to a fast and efficient after sales service.

A specialised distribution network

There are more than 70 distributors available throughout the world to help you with your wine business. As true preservation and wine service experts, they will be able to provide you with the best solution that is adapted to your needs. Find your nearest distributor at **www.eurocavepro.com**

3D layout software

In order to meet your visualisation and organisation needs for future professional installations, EuroCave Professional has developed specific 3D software that lets you build, modify and develop a virtual installation of EuroCave products in restaurant dining rooms, cellars, supermarket aisles and more.

This tool is accessible free of charge at all EuroCave distributors.

BEYOND PRODUCTS, EUROCAVE PROFESSIONAL SERVICES

Cabotte. London-UNITED KINGDOM

Maintenance and upkeep services

Each EuroCave Professional product has an individual identification number that establishes its origin and authenticity. Only certified EuroCave Professional distributors are authorised to carry out the EuroCave International Warranty* service :

- From 2 to 5 year guarantees depending on the products
- Maintenance contracts from 2 to 4 years for all of our wine by the glass service solutions Vin au Verre 8.0 and Wine Bar 8.0.

**Additional warranty offers are detailed in the general conditions for sale at your EuroCave Professional distributor's office.*

Globus. Zurich-SWITZERLAND

EuroCave Group - 24 rue Francis de Pressensé - 69628 Villeurbanne cedex - RCS Lyon B320316995
Specifications may change without notice. - Photos non-binding. – Photos Credits : Studio Guy Renaux - Nicolas Robin Jacques Mateos - Julien Cregut - Laurence Barruel - Beth Crockatt - Garth Oriander - Photo Alto - R.Steck Wädenswil